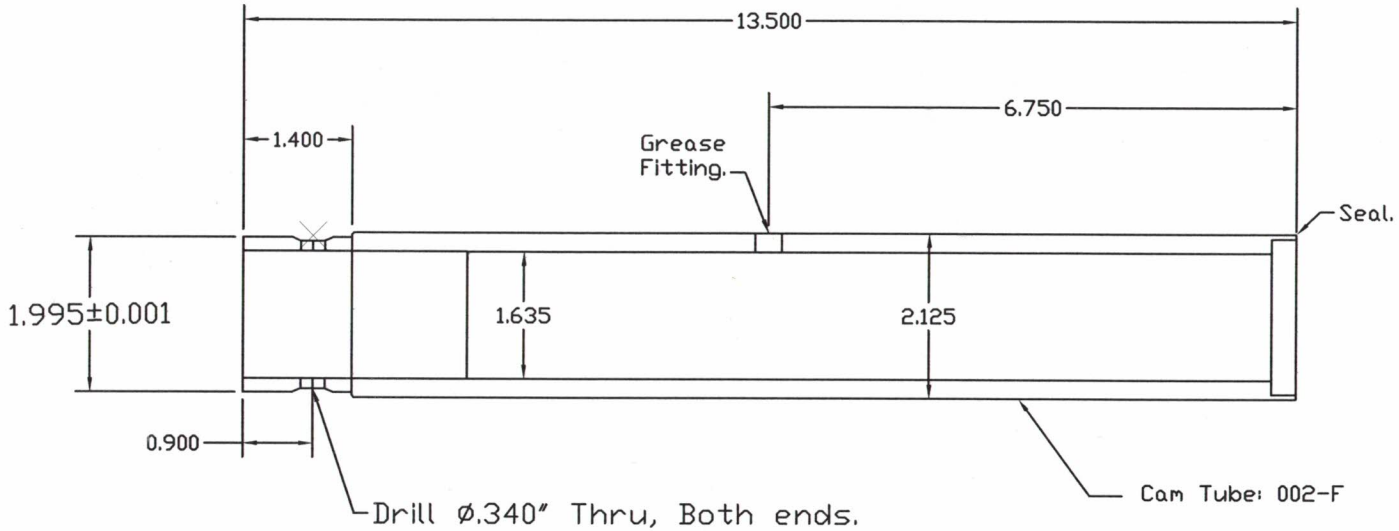

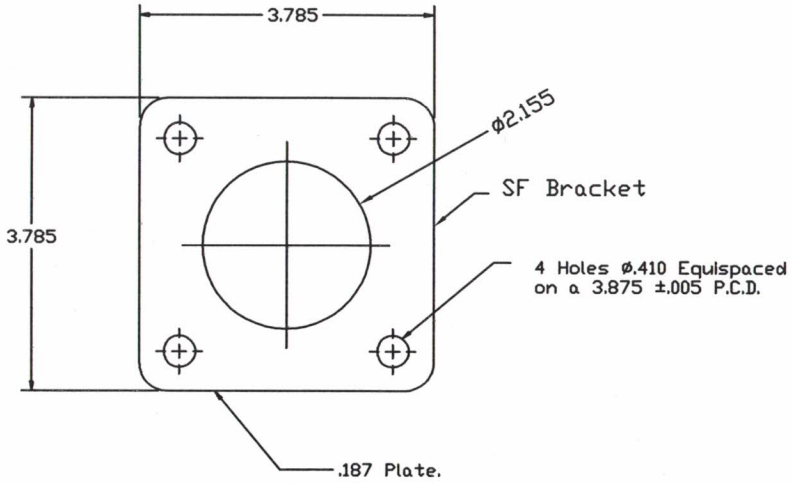

REV. REV-01/01/2000-F.I.	UNLESS STATED OTHERWISE ALL DIMENSIONS ARE INUNITS TOLERANCES .XX ±.03 .XXX ±.010 ANGULAR ±2°		Algo Machine Shop LTD 232 Echo Lake RD. Ontario, POS-1CO
	DRAWN: F.I	DATE: 01/01/2000	TITLE: CAM...
	SCALE: N.T.S.	MAT'L.: 1010	DRAWING NO.: 002-F