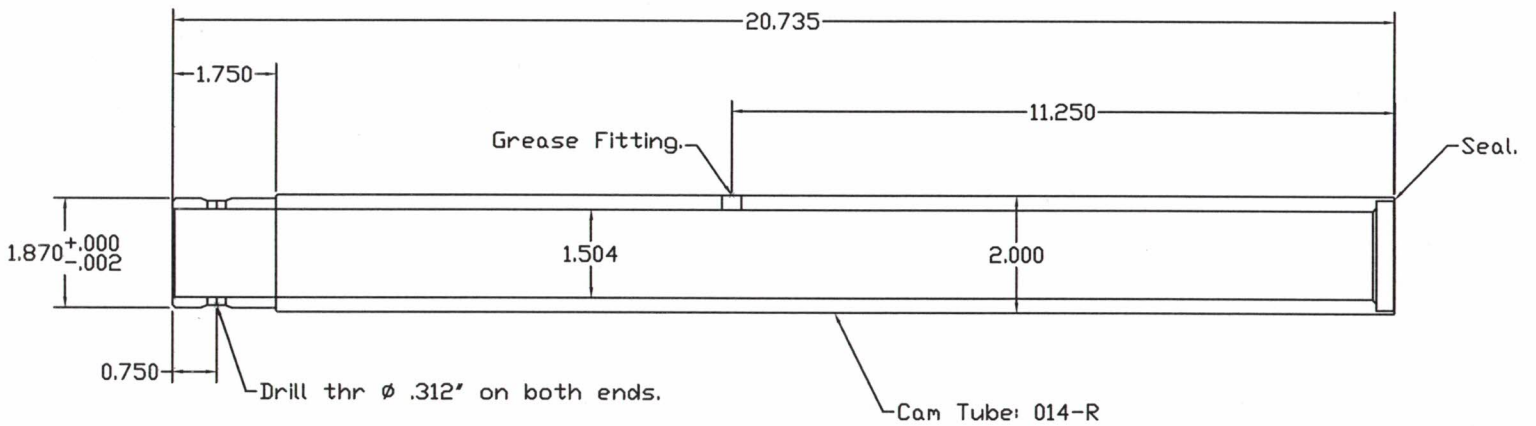

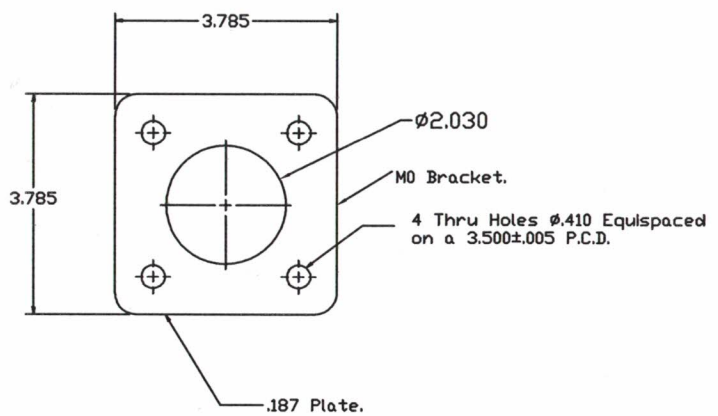

REV-02/27/2024-FL	UNLESS STATED OTHERWISE ALL DIMENSIONS ARE INUNITS TOLERANCES .XX ±.03 .XXX ±.010 ANGULAR ±2°		Algo Machine Shop LTD 232 Echo Lake RD. Ontario, POS-1C0
	DRAWN: F.I	DATE: 01/01/2000	TITLE: CAM...
REV:	SCALE: N.T.S.	MAT'L: 1010	DRAWING NO.: 014-R